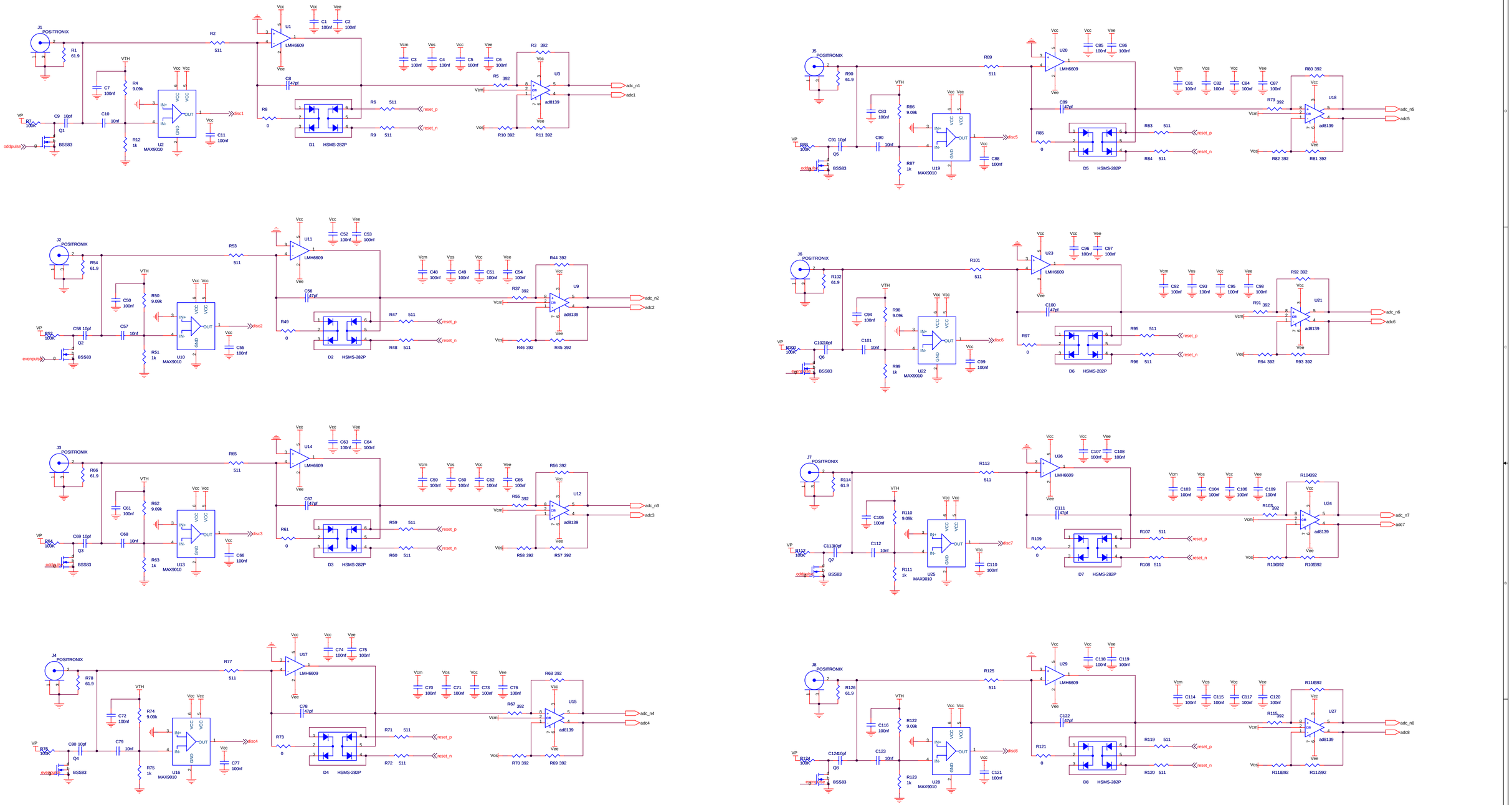

Title	<Title>		
Size D	Document Number <Doc>		Rev <RevCode>
Date: Sunday, December 10, 2006	Sheet 1 of 2		

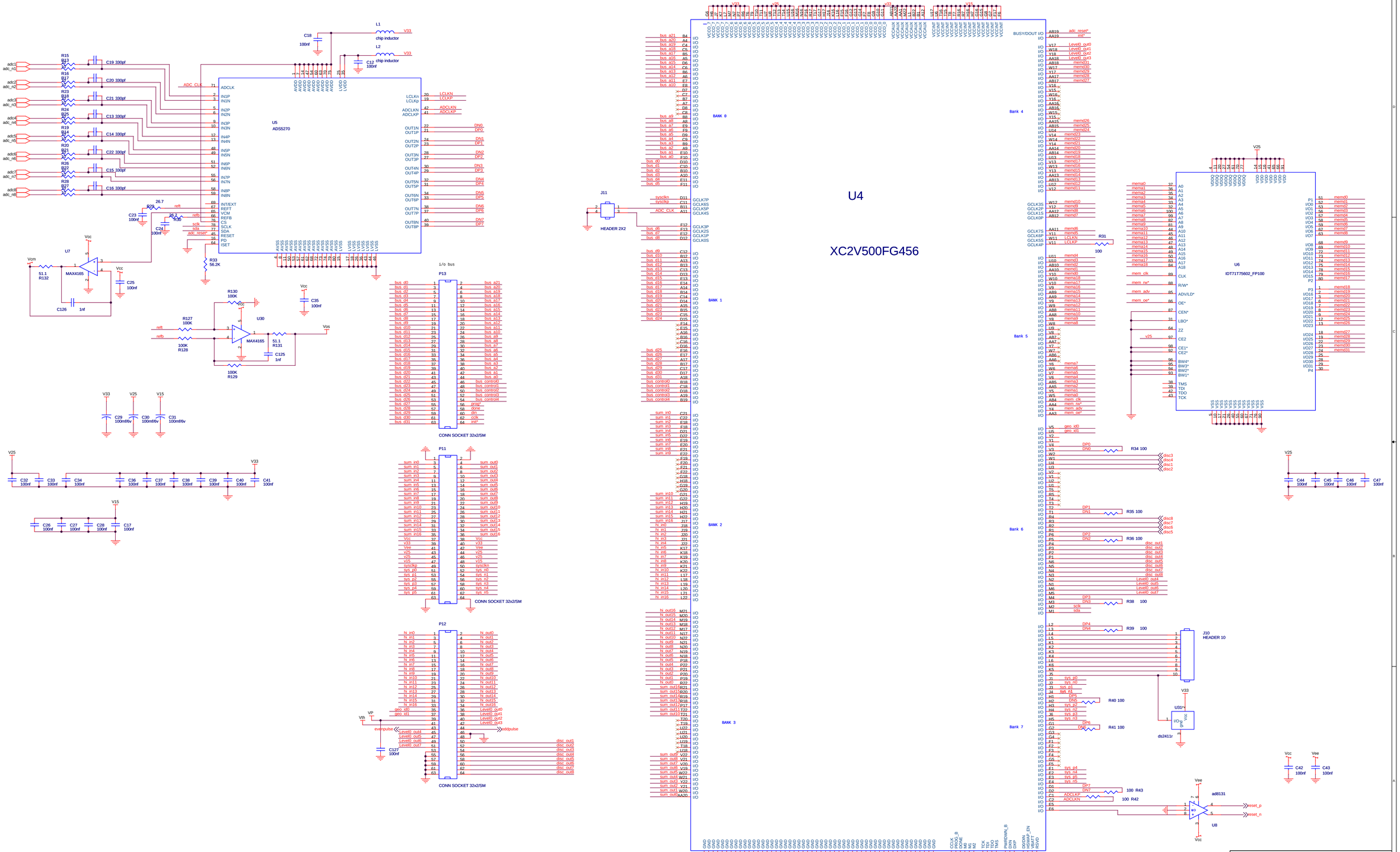

Title	<Title>
Size D	Document Number <Doc>
Rev	<RevCode>
Date: Thursday, February 08, 2007	Sheet 2 of 2