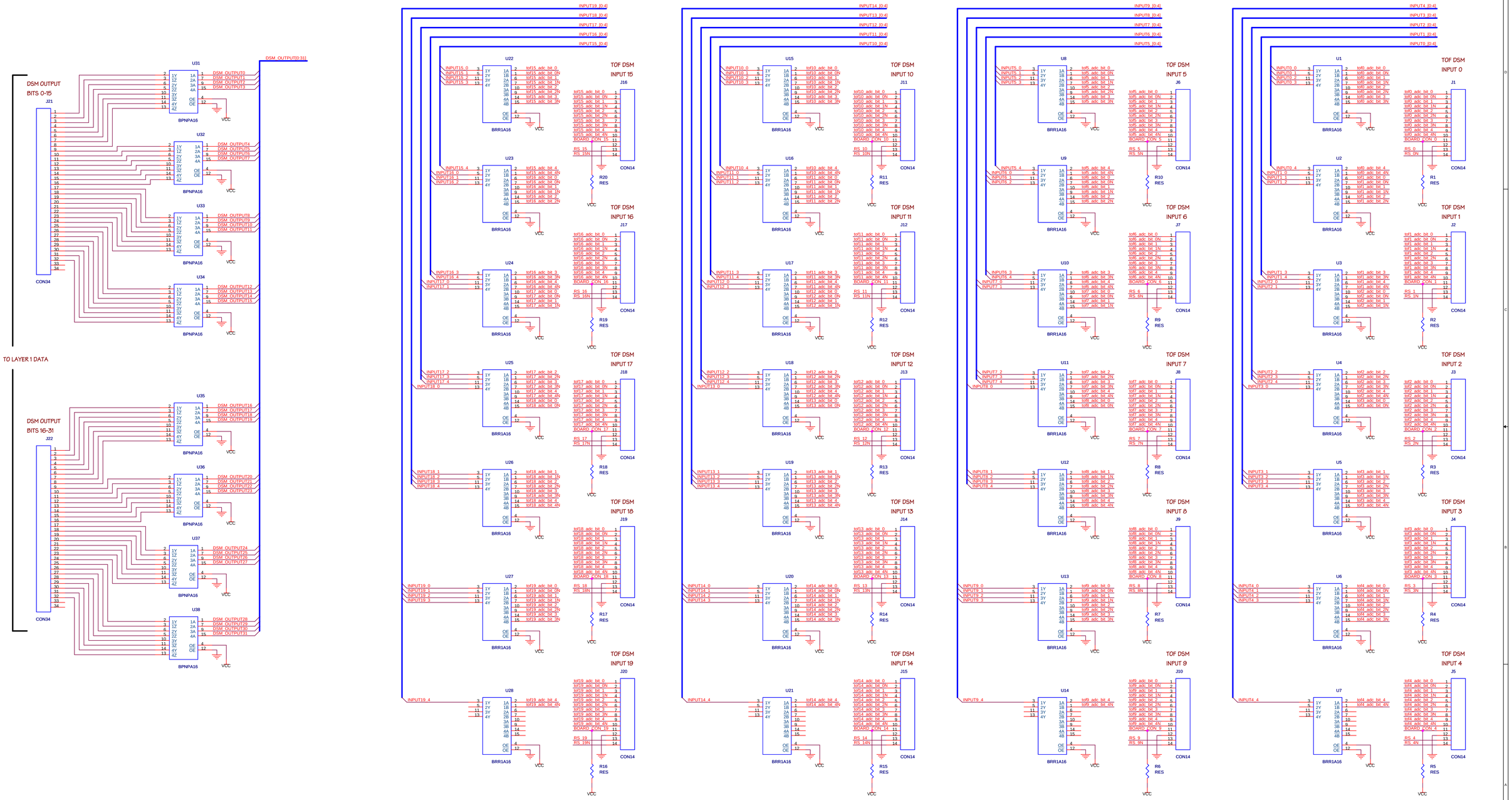

NOTE 1:
BOARD_CON_[19:0] bits are optional, of which only 8 bits can be mapped to the P2A & P2B connector rows to the DSM

Brookhaven National Laboratory			
Title: 20 Channel _ TOF DSMI			
Size: D	Document Number: DWG # 0616108		Rev: A
Date: Tuesday, July 08, 2008	Sheet 1 of 2		

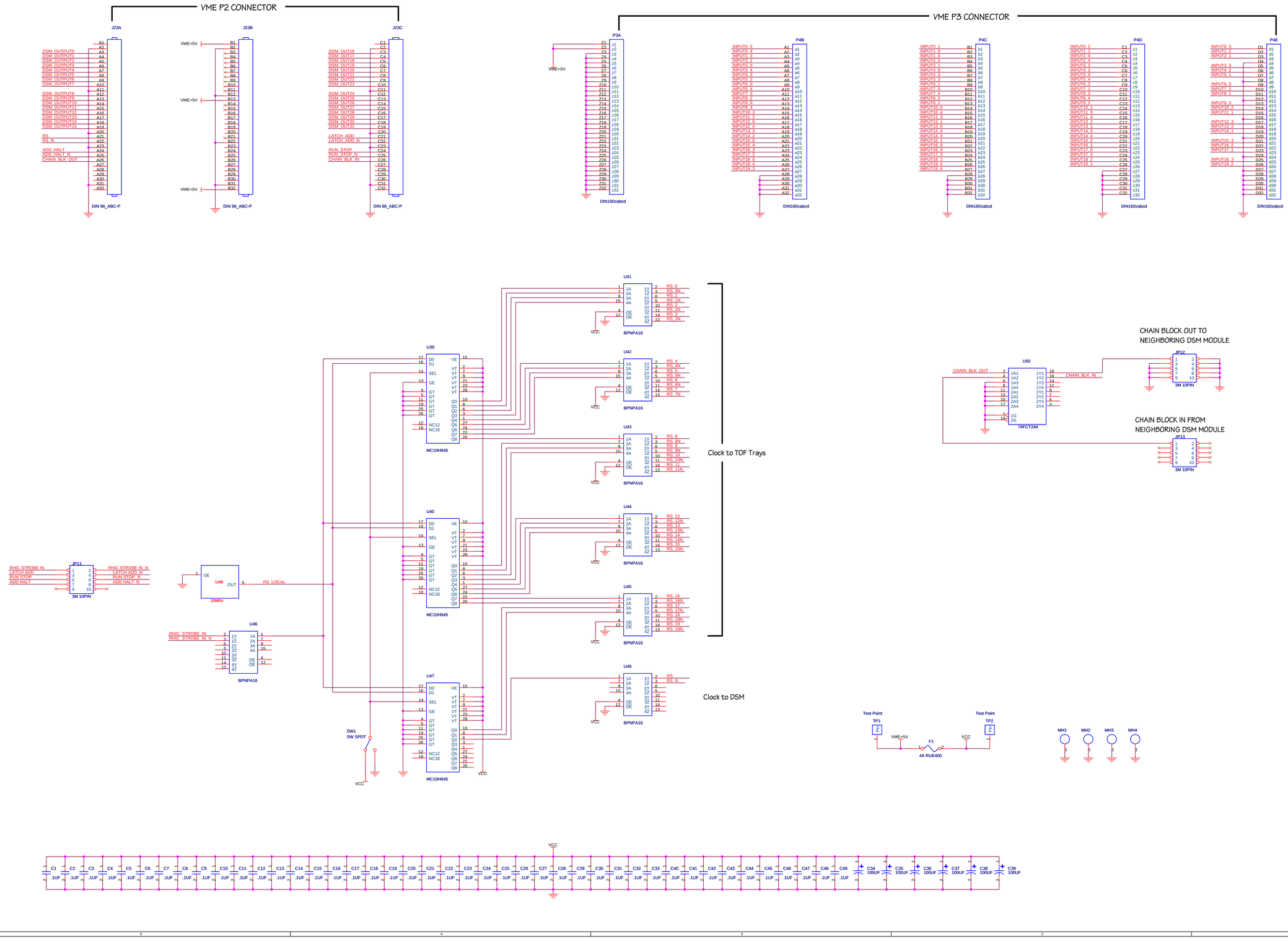
VME P2 CONNECTOR
VME P3 CONNECTOR
J23A
J23B
J23C
P3A
P4B
P4C
P4D
P4E
DIN 96_ABC-P
DIN160zabcd
VME+5V
DSM_OUTPUT0
DSM_OUTPUT1
DSM_OUTPUT2
DSM_OUTPUT3
DSM_OUTPUT4
DSM_OUTPUT5
DSM_OUTPUT6
DSM_OUTPUT7
DSM_OUTPUT8
DSM_OUTPUT9
DSM_OUTPUT10
DSM_OUTPUT11
DSM_OUTPUT12
DSM_OUTPUT13
DSM_OUTPUT14
DSM_OUTPUT15
RS
RS_N
ADD_HALT
ADD_HALT_N
CHAIN_BLK_OUT
DSM_OUT16
DSM_OUT17
DSM_OUT18
DSM_OUT19
DSM_OUT20
DSM_OUT21
DSM_OUT22
DSM_OUT23
DSM_OUT24
DSM_OUT25
DSM_OUT26
DSM_OUT27
DSM_OUT28
DSM_OUT29
DSM_OUT30
DSM_OUT31
LATCH_ADD
LATCH_ADD_N
RUN_STOP
RUN_STOP_N
CHAIN_BLK_IN
INPUT0_0
INPUT0_4
INPUT1_3
INPUT2_2
INPUT3_0
INPUT3_4
INPUT4_3
INPUT5_2
INPUT6_0
INPUT6_4
INPUT7_3
INPUT8_2
INPUT9_0
INPUT9_4
INPUT10_3
INPUT11_2
INPUT12_0
INPUT12_4
INPUT13_3
INPUT14_2
INPUT15_0
INPUT15_4
INPUT16_3
INPUT17_2
INPUT18_0
INPUT18_4
INPUT19_3
INPUT0_1
INPUT1_0
INPUT1_4
INPUT2_3
INPUT3_1
INPUT4_0
INPUT4_4
INPUT5_3
INPUT6_1
INPUT7_0
INPUT7_4
INPUT8_3
INPUT9_1
INPUT10_0
INPUT10_4
INPUT11_3
INPUT12_1
INPUT13_0
INPUT13_4
INPUT14_3
INPUT15_1
INPUT16_0
INPUT16_4
INPUT17_3
INPUT18_1
INPUT19_0
INPUT19_4
INPUT0_2
INPUT1_1
INPUT2_0
INPUT2_4
INPUT3_2
INPUT4_1
INPUT5_0
INPUT5_4
INPUT6_2
INPUT7_1
INPUT8_0
INPUT8_4
INPUT9_2
INPUT10_1
INPUT11_0
INPUT11_4
INPUT12_2
INPUT13_1
INPUT14_0
INPUT14_4
INPUT15_2
INPUT16_1
INPUT17_0
INPUT17_4
INPUT18_2
INPUT19_1
INPUT0_3
INPUT1_2
INPUT2_1
INPUT3_3
INPUT4_2
INPUT5_1
INPUT6_3
INPUT7_2
INPUT8_1
INPUT9_3
INPUT10_2
INPUT11_1
INPUT12_3
INPUT13_2
INPUT14_1
INPUT15_3
INPUT16_2
INPUT17_1
INPUT18_3
INPUT19_2
U41
U42
U43
U44
U45
U49
U39
U40
U47
U46
U48
U50
BPNPA16
MC10H645
74FCT244
10Mhz
VCC
RS_0
RS_0N
RS_1
RS_1N
RS_2
RS_2N
RS_3
RS_3N
RS_4
RS_4N
RS_5
RS_5N
RS_6
RS_6N
RS_7
RS_7N
RS_8
RS_8N
RS_9
RS_9N
RS_10
RS_10N
RS_11
RS_11N
RS_12
RS_12N
RS_13
RS_13N
RS_14
RS_14N
RS_15
RS_15N
RS_16
RS_16N
RS_17
RS_17N
RS_18
RS_18N
RS_19
RS_19N
RS_LOCAL
Clock to TOF Trays
Clock to DSM
CHAIN BLOCK OUT TO
NEIGHBORING DSM MODULE
CHAIN BLOCK IN FROM
NEIGHBORING DSM MODULE
JP12
JP13
3M 10PIN
JP11
RHIC_STROBE_IN
LATCH_ADD
RUN_STOP
ADD_HALT
RHIC_STROBE_IN_N
LATCH_ADD_N
RUN_STOP_N
ADD_HALT_N
RHIC_STROBE_IN
RHIC_STROBE_IN_N
SW1
SW SPDT
Test Point
TP1
TP2
VME+5V
F1
4A RUE400
MH1
MH2
MH3
MH4
C34 100UF
C35 100UF
C36 100UF
C37 100UF
C38 100UF
C39 100UF
Brookhaven National Laboratory
Title
20 Channel_TOF DSMI
Size D
Document Number
DWG # 0616108
Rev A
Date: Tuesday, July 08, 2008
Sheet 1 of 1